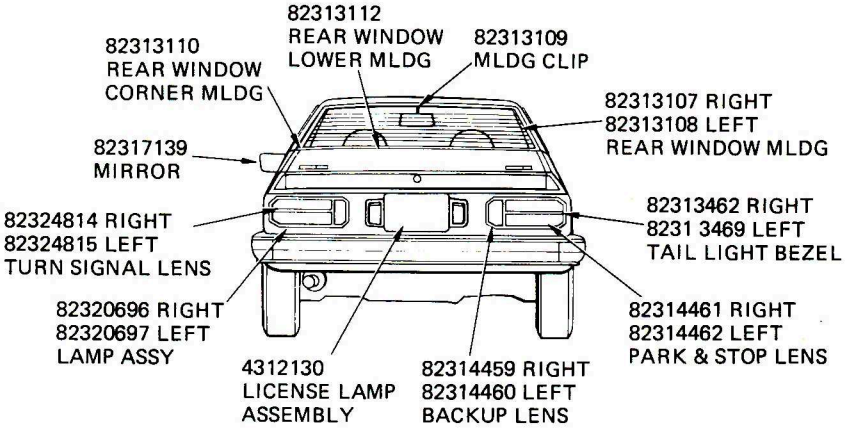

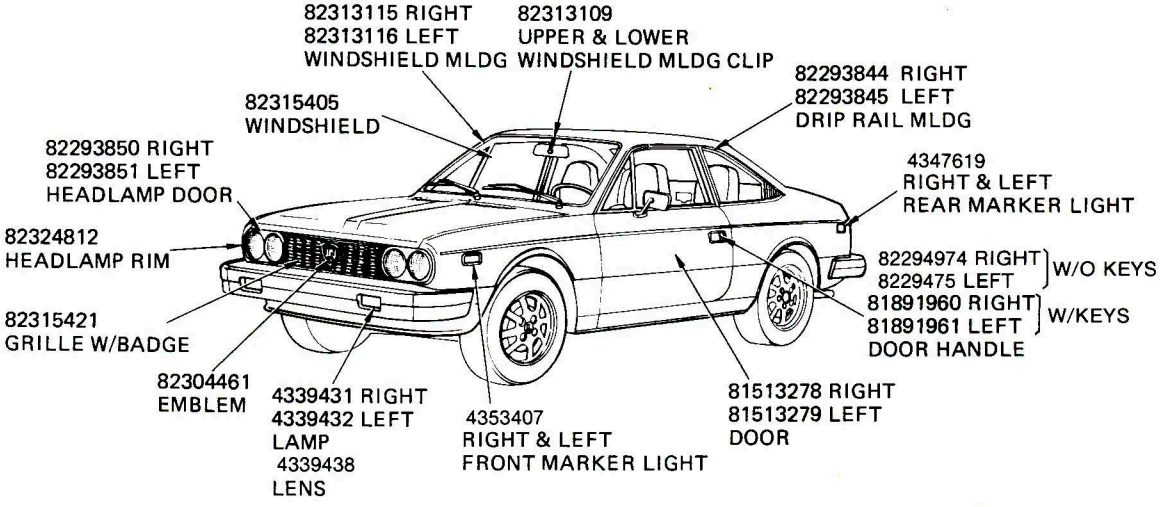

1976 BETA COUPE

(UP TO COUPE # 607.335)